Installation, Operation and Maintenance Instructions

Self-regulating cable for Heat Trace applications

IMPORTANT GENERAL INSTRUCTIONS

These instructions are to be followed when installing Warmup Heating cables on pipes in ordinary locations. Consult factory for installation of braided cable in hazardous locations. Warmup has two basic types of heating cables: Self-Regulating and Constant Wattage. Although they are all resistance type cables, they each have different operating characteristics. These characteristics may make one type of cable more suitable for a particular application than another. Below is a chart highlighting certain characteristics for Warmup heating cables.

	Self-Regulating	Constant Wattage
Hazardous ratings available	Yes	Yes
Usable on plastic pipe	Yes*	No
Can be cut to length in field	Yes	Yes
Can be single over lapped	Yes	No

* Low temperature cables only. UL listing only applies to 3W/Ft. cables

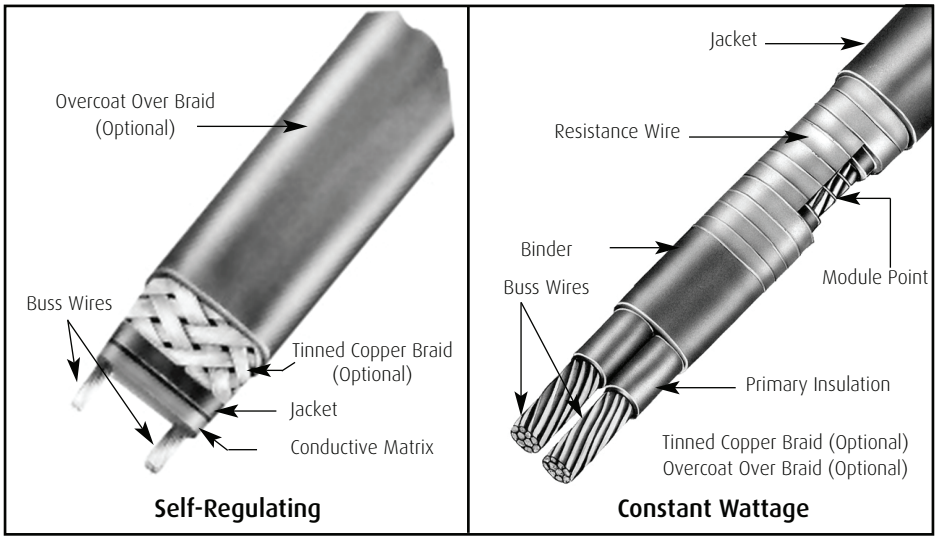

INCOMING INSPECTION

1. Open package and visually check for breaks or nicks in the cable jacket. File claim with carrier if any damage is found.
2. Never energize the cable when it's coiled or on a reel. Test only when it is laid out straight.
3. After removing the cable from the carton or wrapping, check the resistance of the unit from buss wires to braid or metal sheath with a 500VDC megger to assure the cables have not been damaged during shipping and handling. If the cable has no braid or metal sheath, uncoil the cable onto a metal surface and check resistance between the buss wires and the metal surface.

⚠WARNING

ELECTRIC SHOCK HAZARD. Any cable with an insulation resistance reading less than 10 megohms before installation should not be installed. Contact your local Warmup representative.

4. The heating cables should be stored in their shipping cartons or on reels in a dry atmosphere until they are ready to be installed.

© 2010 Warmup, Inc.

A. IMPORTANT — GENERAL NOTES REGARDING INSTALLATION OF HEAT TRACING SYSTEMS.

⚠WARNING

FIRE HAZARD. Failure to follow these guidelines could result in property damage or personal injury.

1. Read this instruction sheet and those enclosed with the accessories to familiarize yourself with the products.
2. Ensure all pipes, tanks etc. have been hydrostatically tested prior to the installation of the heating cable.
3. Always install tracing at the 5 or 7 o'clock position on a pipe.
4. Installation Guidelines for fire protection systems:
   a. For use on insulated UL listed steel schedules 5, 10, 20 and 40 standpipe and sprinkler system pipe up to and including 6 in. size. Includes use on elbows, tees, flanges, hangers and valves as shown. (show figures of heating cable installed to various equipment as mentioned above). UL listed fiberglass insulation with a minimum k-factor of 0.25 BTU/hr -°F-ft^2-in with weatherproof cladding must be used.
   b. For systems having piping which connects between buildings in unheated areas, coolers and freezers.
   c. For systems having sprinkler piping that is installed in coolers or freezers where the temperature is -40°F or greater.

Fire suppression system heater circuits must be connected to monitoring equipment. A listed power supply relay with the appropriate voltage coil shall be connected in parallel prior to the heat tracing (should show figure with typical installation). The output contacts of the listed power supervisory relay should be connected to a listed fire control panel which has provisions for supervisory circuits.

5. **Do not attempt to heat trace any piece of equipment which will not be insulated.**
6. **Do not install heating cable on equipment which could become hotter than the heating cable's maximum exposure temperature.**
7. **Do not install heating cable in an area or on equipment which contains potentially corrosive materials without having a suitable protective jacket on the cable.**
8. **The minimum bending radius for all Warmup heating cables is six times the minor diameter.**
9. **Allow a minimum of 2" between cable runs.**
10. **Always install heat tracing on the outside radius of elbows.**
11. **Never install heat tracing over expansion joints without leaving slack in the cable.**
12. **Never use tie-wire or pipe straps to secure Self-Regulating Maximum Circuit length or Constant Wattage heating cables.**
13. **Observe all published specifications. Do not expose cables to temperatures above their specified maximums. Do not run cables longer than specified maximum circuit lengths. See table 3 for details.**
14. Pumps and small vessels should be heat traced and controlled with the piping on the inflow end. The cable on the pump or vessel should be physically separate to permit disconnection during maintenance or removal.
15. Use aluminum foil tape to cover the heating cable whenever the cable is not in good contact with the pipe (i.e. at supports, valves, pumps, etc.).
16. Separately controlled circuits should be provided on dead end legs and closed bypasses.
17. No heat tracing circuit should extend more than two feet beyond a point where two or more pipes join when such junctions permit optional flow paths. In such cases, separately controlled traces should be used.
18. The minimum installation temperature for all Warmup heating cables is -40°F (-40°C).
19. Warmup SR heating cables are well suited for heat tracing plastic pipes.

B. INSTALLING A SINGLE RUN OF CABLE ON A PIPE.

1. Mount the reel of cable on a holder and place near one end of the pipe run to be traced. Choose the end from which it will be the easiest to pay out the cable.
2. Pay out the cable from the reel and loosely string along the piping, making sure the cable is always next to the pipe when crossing obstacles. For example, if the heater is on the wrong side of a crossing pipe, you will have to restring the cable or cut and splice it.

⚠CAUTION

To prevent damage to cable, avoid such things as:
– Pulling the cable over sharp edges.
– Forcibly pulling the cable free if it snags while being paid out.
– Allowing the cable to be walked on or subjeced to other abuse which could cause mechanical damage.

3. When you reach the end of the circuit, secure the heater cable to the pipe using glass tape or plastic cable tie with a temperature rating compatible with the heater cable.

   If this end is to have an end seal installed, remember to leave about a foot of extra cable. If it is a power connection, leave about two feet of extra heater cable.

4. (If the heater cable is to be spiralled, go to step 4A.) Begin attaching the cable to the pipe about every foot (.3 meters).
   Place the cable on the bottom half of the pipe at the 5 or 7 o'clock position. Refer to installation detail AD1. Go to step 5.
   a. Note the path of the heater cable and the spiral factor of the design. A simple way to think about spiral factor is: A1.1 spiral factor means install 11 feet of heating cable on every 10 feet of pipe, etc. At about every 10 feet of pipe, pull the required amount of cable and let hang in a loop, and attach the cable to the pipe.
   b. Rotate the loops around the pipe until all the slack has been taken up. Even out the spirals of the heater cable and secure to the pipe as necessary to obtain good contact. The entire circuit can be installed with hanging loops with the spiralling on the pipe being done when you trace the heat sinks. Refer to installation detail AD3.

5. At a heat sink (pipe supports, valves, pumps, reducers, gauges, bucket strainers, etc.), attach the heater cable to the pipe just before the heat sink. Refer to the design specs to determine the amount of heater cable you need to install on the heat sink. Pull this amount of cable into a loop, attach the heater cable on the other side of the heat sink and continue attaching the cable down the pipe as before.

6. When you reach the heater cable reel, you should have the heater cable attached all along the pipe, with the correct amount of heater cable pulled in loops at all heat sinks. Attach the cable to the pipe, (leave an extra foot if at an end seal, two feet if at a power connection) and cut the heater cable from the reel.
7. Install the heater cable loops on the heat sinks. Refer to the proper installation detail (AD5-AD12) for a general idea of how to install the cable, but remember:
   - It is important to get the proper amount of heater cable on the heat sink, rather than exactly as the detail shows. The detail is just a guide.
   - Self-Regulating heater cables are very flexible and can be single overlapped for installation ease. Feel free to use this feature when you can.

⚠WARNING

FIRE HAZARD. Do not overlap constant wattage or mineral insulated heating cables.

- By having the cable installed this way, it can be removed easily from the heat sink without cutting if access to, or removal of the heat sink is required.

Note: If a tee is designed into the system, or if you are using two or more short cable lengths to complete a circuit, allow two or three feet of each cable to overlap. This will allow flexibility in assembling the connection kit and locating it on the pipe.

C. INSTALLING MORE THAN ONE HEATING CABLE ON A PIPE.

There are two cases where you will need to install more than one heater cable on a pipe:

- When the design calls for more than one cable.
- When the lines being heat traced are considered important enough to install a backup (redundant) heat tracing system.

The installation requirements are different for these cases.

1. **Installing multiple heater cables for design requirements.**

   The most common multiple cable requirement is two cables on a pipe. Below are the recommended techniques for the two cable systems. They also apply to installations where three or more cables are to be installed on a pipe.

   There are two ways of paying out two heater cables along a pipe. The first is to locate two reels of heater cable and supply one cable from each. This method works for all types of piping runs.
   However, it may increase material waste by leaving unusable lengths from two reels. The second way is to supply both cables from one reel. This method is generally the easiest for relatively straight, simple piping runs. For each circuit, decide which method to use and then go to the appropriate part below.

   a. Supplying cable from two reels.
   The general procedure here is the same as given earlier, but there are a few things to do to make sure the system is correctly done.

   i. At each heat sink, the easiest thing to do is supply the extra heater called for by the design drawing from only one heater cable. This avoids having to measure out half of the requirement from each cable.
   ii. When doing the previous step, leave a small loop other cable at equipment which may be serviced, such as pumps, valves, instruments, etc. This is so both heater cables may be removed enough for future access.

   b. Supply heater cables from one reel.
   The general procedure is the same as given earlier, but there are a few things to do to make sure the system is correctly done.

   i. With this method, a loop is pulled for the entire circuit. To do this, attach the end of the heater cable to the pipe near the heater cable reel. Remember to leave enough extra cable for the type of connection to be installed.
   ii. Begin pulling the cable off the reel in a large loop down the piping run. Be sure to keep the cable next to the pipe. Moving down the run, continue attaching the cable to the pipe, leaving the side of the loop going back to the reel unattached.
   iii. You will want both sides of the loop to be about the same length to avoid future problems. Also, it is easier to install the extra cable required at each heat sink from only one cable. Therefore, pull the right amount of extra heater cable needed at every second heat sink from the side of the loop you are attaching to the pipe. At the remaining serviceable heat sinks (pumps, valves, instruments, etc.) don't forget to leave a short loop of cable for slack when access to the equipment is needed.
   iv. When the end of the piping run is reached, pull the proper amount of extra cable for the connection to be installed.
   v. Now, begin working the remaining side of the loop back toward the reel, installing it on the pipe and heat sinks as required.

2. **Installation for Backup (Redundant) Systems.**
   The purpose of a backup system is to provide the proper amount of heat from the second heater cable if there are problems with the first. Therefore, each cable must be installed so it can do the job alone. The simplest way to do this is to install the first heater cable as given in Section B. Then, go back and install the back-up heater cable the same way.

   There are several things to keep in mind:

   - The power connections and end seals for the two cables are often designed to be at opposite ends of the run in a redundant system. Remember to leave the proper amount of extra cable for the connection to be installed on each cable at that end.
   - On piping one inch IPS or smaller, it can be difficult to apply both heater cables with good contact at all places. The main thing is to get the correct amount of cable installed. However, try to get as much contact with the piping and heat sinks from both cables as possible.

TYPICAL INSTALLATION DETAIL

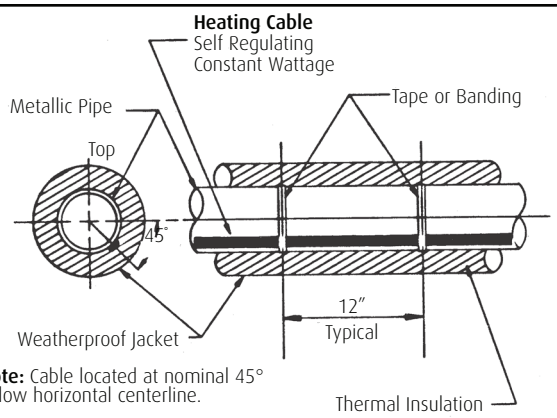

Note: Cable located at nominal 45° below horizontal centerline.

AD1 - One Run of Cable

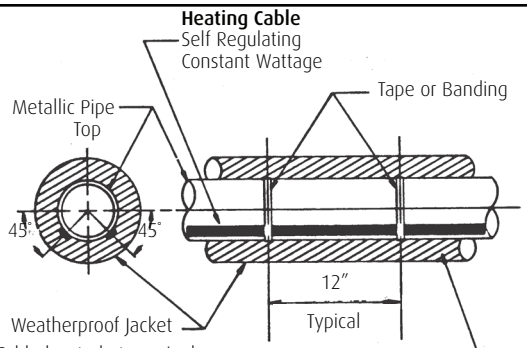

Note: Cable located at nominal 45° below horizontal centerline on either side.

AD2 - Two Runs of Cable

Note:
1. Do not spiral if ratio of heater length to pipe length is greater than 1.5. Instead, use two cables or choose a higher wattage heater.

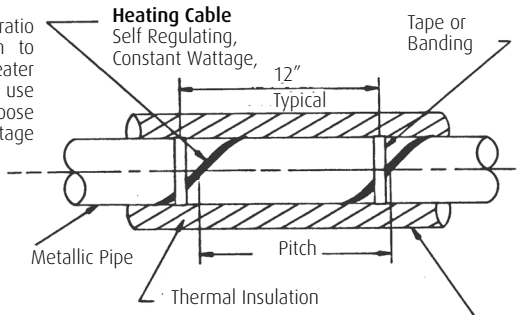

Note:
2. Refer to pitch chart in design data section on circuit drawing for proper pitch length.

AD3 - One Cable-Spiralling Method

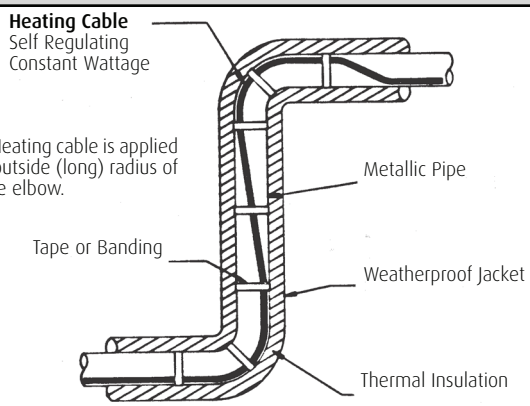

Note: Heating cable is applied to the outside (long) radius of the pipe elbow.

AD4 - One Run of Cable at Pipe Elbow

TYPICAL INSTALLATION DETAIL

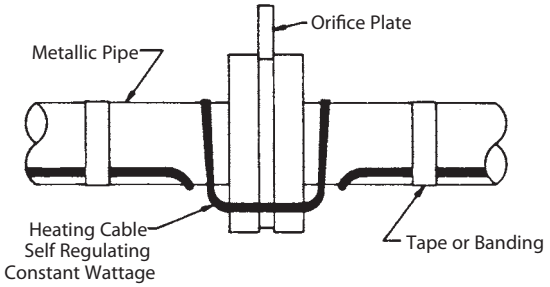

Note: Insulate over flanges & orifice plate and weatherseal. All piping must be fully insulated and weathersealed.

AD5 - Orifice Flange

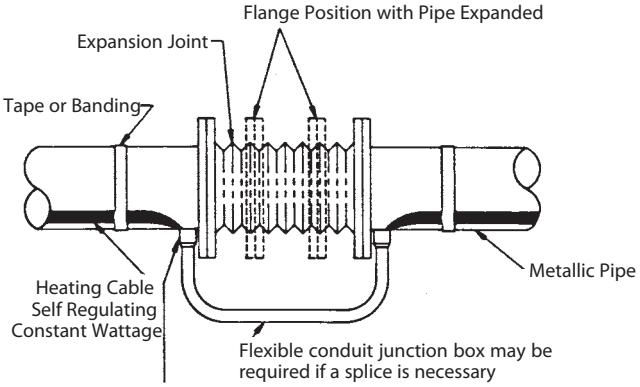

Conduit connection fitting to be suitable for area classification. Heating cable may be run continuously through the conduit.

Note: All piping must be fully insulated and weathersealed.

AD6 - Expansion Joint

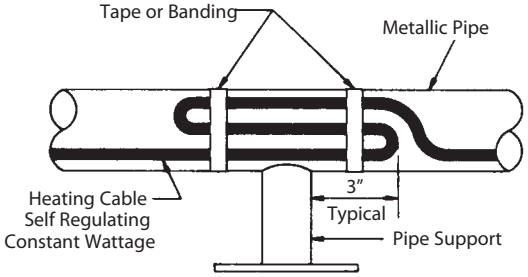

Note: Pipe Support to be insulated two feet below pipe and weathersealed. All piping must be fully insulated and weathersealed.

AD7 - Welded Support

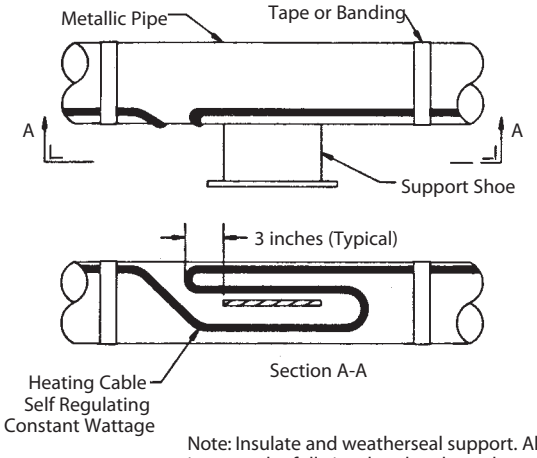

Note: Insulate and weatherseal support. All piping must be fully insulated and weathersealed.

AD8 - Shoe Support

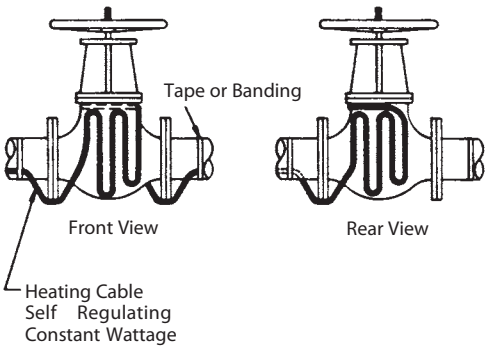

Note: All piping must be fully insulated and weathersealed.

AD9 - Valve

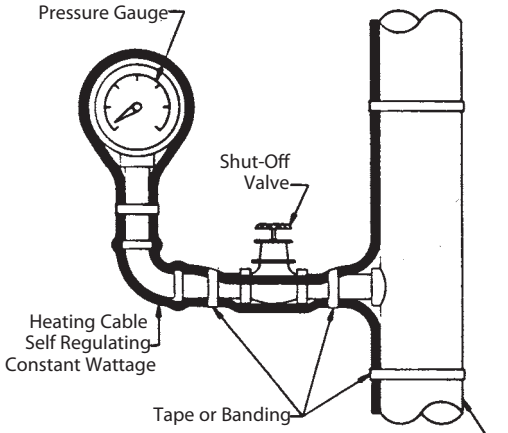

Note: Completely insulate & weatherseal line and gauge. All piping must be fully insulated and weathersealed.

AD10 - Pressure Gauge

TYPICAL INSTALLATION DETAIL

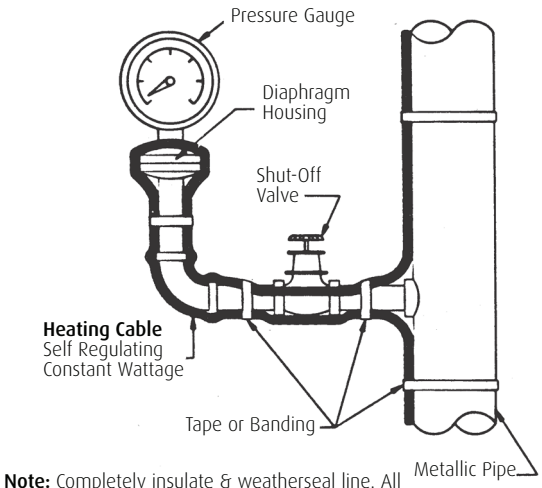

Note: Completely insulate & weatherseal line. All piping must be fully insulated and weathersealed.

AD11 - Diaphragm Pressure Gauge

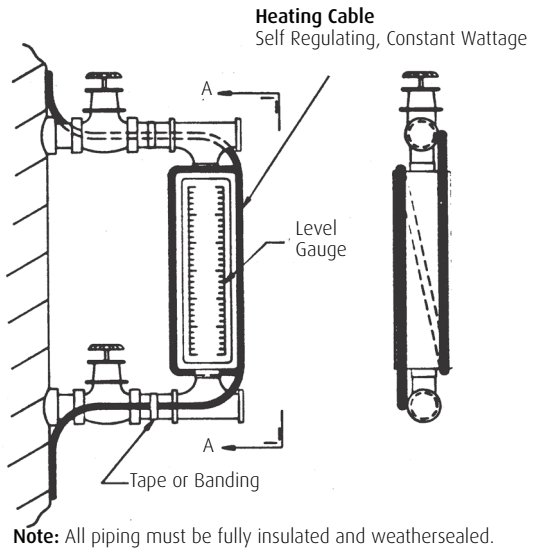

Note: All piping must be fully insulated and weathersealed.

AD12 - Level Gauge

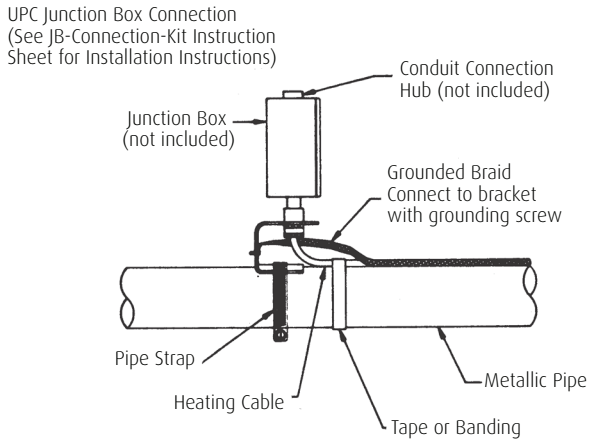

Note: All piping must be fully insulated and weathersealed.

AD13 - U Series Power Connection

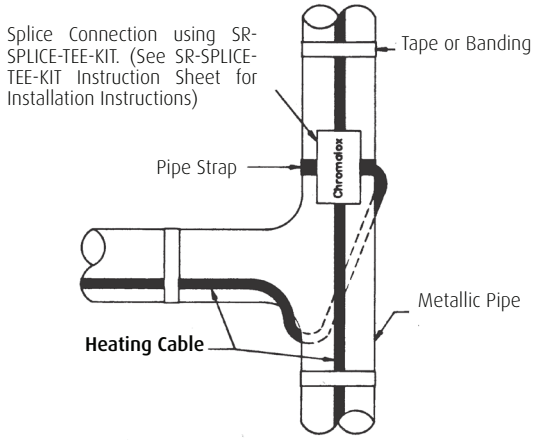

Note: All piping must be fully insulated and weathersealed.

AD14 - U Series Splice & Tee Connection

TYPICAL INSTALLATION DETAIL

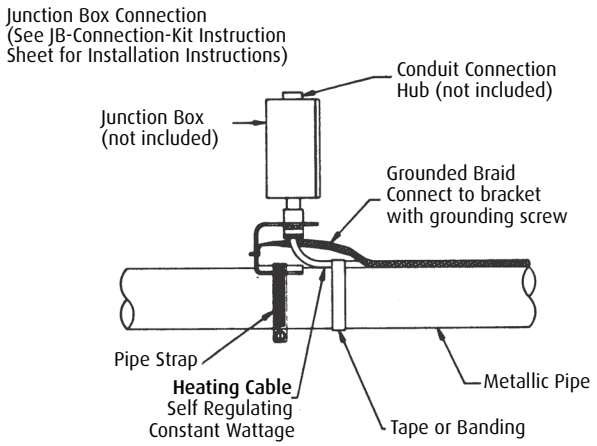

Note: All piping must be fully insulated and weathersealed.

AD13 - EL Series Power Connection

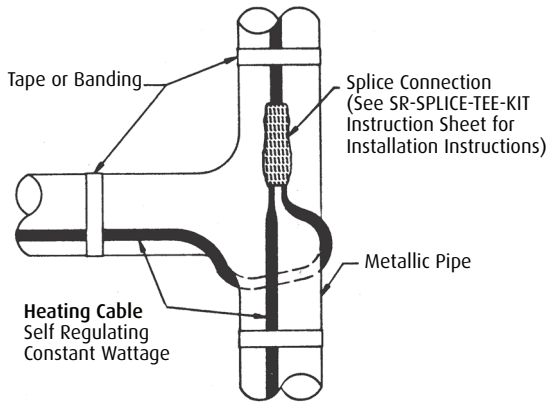

Note: All piping must be fully insulated and weathersealed.

AD14 - EL Series Splice & Tee Connection

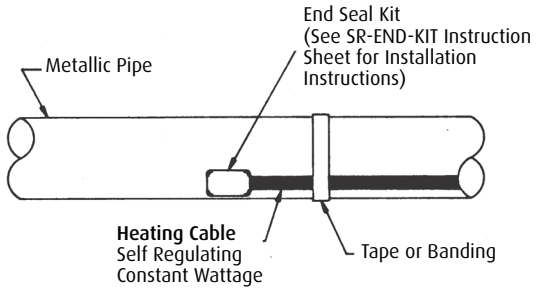

Note: All piping must be fully insulated and weathersealed.

AD15 - End Seal

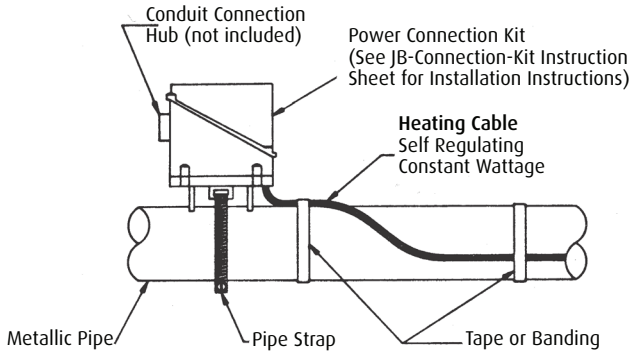

Note: All piping must be fully insulated and weathersealed.

AD16 - DL Series Power Connection

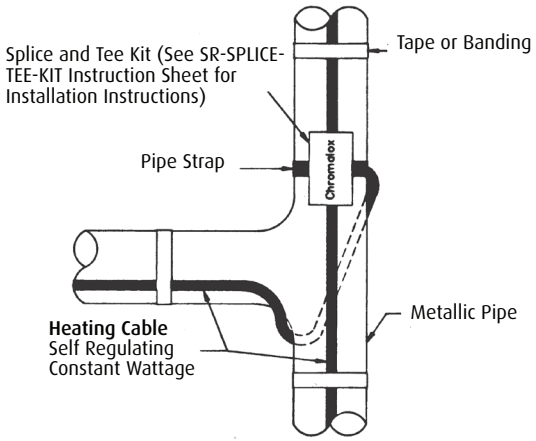

Note: All piping must be fully insulated and weathersealed.

AD17 - DL Series Splice & Tee Connection

Note:
1. For multiple heaters place control sensor 90˚ from nearest heater or centered between equally spaced heaters.

2. Place high-limit sensor approximately 15″ from heater and mount in the same manner as shown below.

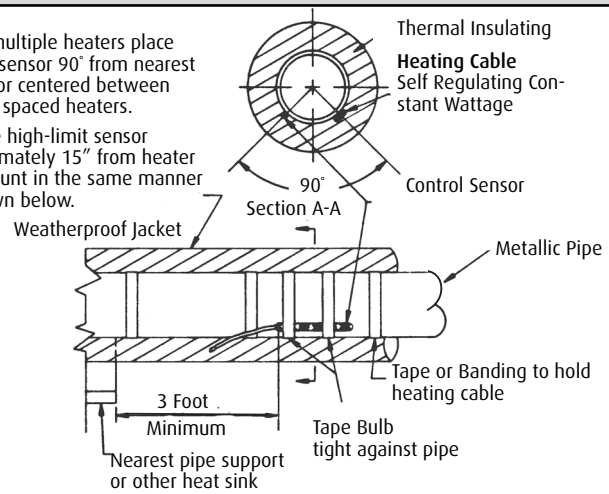

AD18 - Sensor Placement

⚠WARNING

ELECTRIC SHOCK HAZARD. Disconnect all power before installing or servicing heating cable. Failure to do so could result in personal injury or property damage. Heater must be installed by a qualified person in accordance with the National Electrical Code, NFPA 70.

⚠WARNING

ELECTRIC SHOCK HAZARD. Any installation involving electric heating cables must be performed by a qualified person and must be effectively grounded in accordance with the National Electrical Code to eliminate shock hazard.

ACCESSORIES:

1. Only use Warmup installation kits and use them only for the operations for which they are designed.
2. The instructions included in the Warmup installation accessories must be followed in order for the third party approvals (UL, FM, CSA, ATEX, IECEx, etc.) to apply.
3. Junction boxes must be in accordance with the requirements of the area classification.
4. All outdoor junction boxes must be located above grade level. Covers should be kept on the boxes at all time when not being worked in.
5. All terminations must be protected from the weather and from physical damage by locating them either under the weatherproof insulation or inside an appropriate junction box.
6. All equipment must be properly grounded.
7. Install installation accessories according to the instructions included in the kits and per installation details AD13 through AD17.

⚠CAUTION

To prevent equipment damage, Circuits fed from overhead lines should be protected by secondary lighting arrestors.

CONTROLS:

1. All heating circuits should have temperature controls. Temperature control of the pipeline can be obtained through various Warmup temperature controls.
2. Contactors must be used when load currents exceed the rating of the thermostat contacts. Equipment protection ground fault (30 mA EPD) thermal breakers are recommended.
3. The temperature control should be mounted in a location where it will not be subjected to excessive shock or vibration.
4. Line sensing temperature sensors should be mounted in accordance with Installation Detail AD18 (see Detail on previous page).
5. Ambient sensing temperature sensors should be located at a point where the lowest ambient temperature is expected.

⚠CAUTION

To prevent equipment damage, handle and secure temperature sensors, especially thermostat bulbs and capillaries with care to avoid distortion or crimping which might impair control accuracy.

6. Exposed thermostat capillaries should have mechanical protection.

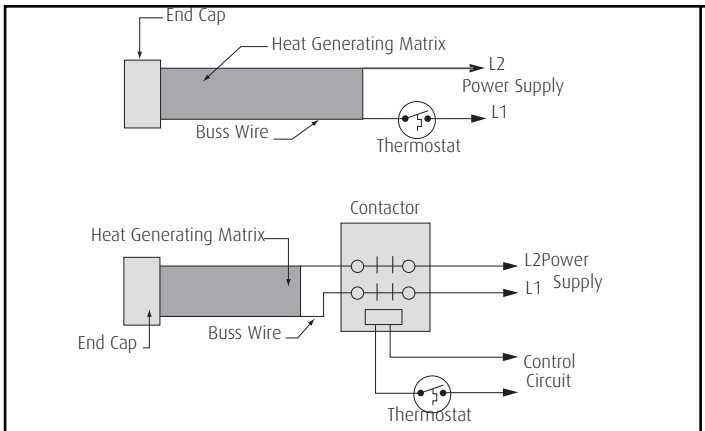

I. Self-Regulating

Typical Wiring Diagrams

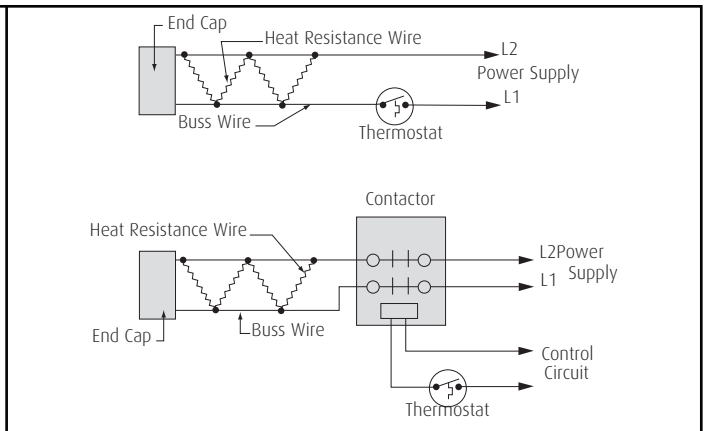

II. Constant Wattage

Typical Wiring Diagrams

INSTALLATION TESTING

When the heater cable and connections for a circuit have been completed, immediately perform the following checks.

1. Visually inspect the heater cable and temperature controls for signs of mechanical damage. If damage is seen, either replace the complete heater cable, or cut out the damaged section and replace using the proper splice connection for the area and cable you are using.
2. Inspect all connections to be sure they are correctly assembled. Be sure each heater cable entry to a connection has a grommet and the compression plates and caps are properly tightened.
3. Inspect the insulation resistance of the circuit using a 500VDC megger. Always perform this test at the power connection. Any cable with an insulation resistance of less than 10 megohms should be removed and discarded.
4. Check voltage at end of circuit and record in log. (Please see Page 11)

THERMAL INSULATION

An installed heating circuit should be thermally insulated immediately to provide protection from damage from ongoing work. Things to remember about insulating:

1. Insulate the equipment being heat traced as soon as possible after the heating cable is installed. This will protect the cable from possible physical damage.
2. The type and thickness of thermal insulation specified on the design drawing must be used. If you use another type or thickness, the heater cable type or amount may have to be changed.
3. Never install wet insulation. Both the piping and the insulation must be dry when thermally insulating a circuit. Wet insulation may cause start-up or operational problems.
4. Properly weatherproof the thermal insulation. All places where valve stems, conduits, pipe supports, connection housing, thermal capillary tubes, etc. extend outside the insulation jacketing must be sealed with a suitable compound to keep water out.
5. Insulate valves fully up to, and including, the packing gland.
6. Heat trace and fully insulate the face of all non-diaphragm pressure instruments.
7. Insulation must be covered by a weatherproof barrier, such as an aluminum jacket.
8. If you are using metal jacketing and sheet metal screws, be sure the screws are not long enough to penetrate the thermal insulation and damage the heater cable.
9. Again, perform the megger test on the circuit immediately after the thermal insulation is installed to detect if any mechanical damage may have occurred.
10. When the insulation and the weatherproofing is complete, attach "Electric Traced" labels on the outside of the insulation. These should be installed where they are visible from normal operations, usually on alternating sides about every 10 feet. It is also useful to mark the location of any connections buried under the insulation.

Additional requirements for rigid thermal insulations:

1. In the standard single heater cable installation, rigid insulations do not need to be oversized. However, they should be carved so there is no gap in the insulation.
2. In case of redundant or multiple heater cables, rigid insulations which are .500 inches oversized should be used.

COMMISSION TESTING

1. Again, visually inspect the piping, insulation and connections for the heater cable to make sure no physical damage has occurred if some time period has elapsed since the installation and start-up.
2. Megger the system again to determine if damage not readily visible has occurred.
3. Turn all branch circuit breakers to the OFF position.

For systems controlled by ambient-sensing thermostats:

1. If the actual ambient temperature is higher than the desired thermostat setting, turn the thermostat setting up high enough to turn the system ON or (some models) turn the selector switch to the ON position.
2. Turn the main circuit breaker ON.
3. Turn the branch breakers ON one-by-one until all are on.
4. Allow system to run at least four hours in order to let all pipes reach steady-state.
5. Measure the amperage draw, ambient temperature and pipe temperature for each circuit and record in the installation log. This information may be needed for future maintenance and troubleshooting.
6. When the system is completely checked out, reset the thermostat to the proper temperature.

For systems controlled by line-sensing thermostats:

1. Set the thermostat to the desired control temperature.
2. Turn the main circuit breaker ON.
3. Turn ON the branch circuit breakers controlled by the thermostat.
4. Allow the pipe temperatures to be raised to the control point. This may take up to four hours for most circuits (large full pipes may take longer).
5. Measure the amperage draw. ambient temperature, and pipe temperature for each circuit and record in the installation log. This information may be needed for future maintenance and troubleshooting.

For redundant systems:

Follow the procedure above for the type of control system you have, but commission the systems one at a time. Start up the primary system, qualify it and shut it down. Then start up the back-up system, qualify it and shut it down.

Table 1 – Maximum Temperatures

CABLE TYPE	MAX. MAINTAIN (POWER ON)	MAX EXPOSURE (POWER OFF)
NAMHT	150˚F	185˚F
NAMSR	150˚F	185˚F

Table 2 – Maximum Maintenance Temperatures

Output(W/Ft.)	Temperatures (°F)								
	3	4	6	6.7	8	9	10.1	10.6	12
w/o FT-1 Tape	340	325	293	282	262	246	229	222	200
w/ FT-1 Tape	350	344	332	328	320	314	307	304	296

SPECIFICATIONS (cont'd)

NAMHT Circuit Breaker Selection (Max. Circuit Lengths in Ft.)

Cable Rating	40°F Start-Up (Ft.)			0°F Start-Up (Ft.)		
	20A	30A	40A	20A	30A	40A
NAMHT-3W-120V	350	360	NR	270	360	NR
NAMHT-3W-240V	660	NR	NR	555	660	NR
NAMHT-5W-120V	230	270	NR	180	270	NR
NAMHT-5W-240V	450	540	NR	360	540	NR
NAMHT-8W-120V	180	215	NR	145	215	NR
NAMHT-8W-240V	330	420	420	265	395	420

NR = Not Required. Maximum circuit length has been reached in a smaller breaker size.
Note – Thermal magnetic circuit breakers are recommended since magnetic circuit breakers could "nuisance trip" at low temperature.

MAINTENANCE

Recommended maintenance for Warmup heat tracing systems consists of performing the steps involved in the commission testing on a regular basis. For those systems controlled by line sensing thermostats, Warmup recommends checking the system at least twice per year. Systems controlled by an ambient-sensing thermostat should be checked when the season requiring their use is approaching.

Repair or replace all damaged heater cable, connections, thermal insulation and weatherproofing using only Warmup connections and methods before testing the system.

Record all repairs made and measurements taken in the installation and maintenance log.

INSTALLATION AND MAINTENANCE LOG

Reference Information

Circuit Number						
Circuit Breaker Number						
Drawing Number						
Circuit Length						

Heat Tracing Visual Checks

No Signs of Moisture, Corrosion or Damage	Initial						
	Date						
Proper Electrical Connection	Initial						
	Date						
Proper Grounding of the Braid	Initial						
	Date						

Heat Tracing Electrical Checks

Megger Test (500 VDC) (Bypass Controls)	Meg Ohms						
	Date						
Amperage Draw Test Compare to design Amperage Draw	Amperage						
	Amb. Temp.						
	Date						
Voltage at end of Circuit*	Voltage						
	Date						

Accessories/Control Checks

Temperature Control Properly Set	Set Point						
	Date						
Sensors Protected and Undamaged	Initial						
	Date						
All Enclosures and Kits Closed and Sealed	Initial						
	Date						

Thermal Insulation Checks

Location of Kits Visible on Outside of Insulation	Initial						
	Date						
Insulation is Complete, Dry and Weather-proof	Initial						
	Date						

*** This test must be performed at installation or at any time the cable is cut or damaged in any way.**

Limited Warranty:
Please refer to the Warmup limited warranty applicable to this product at www.warmup.com

Warmup Inc.
52 Federal Road, Unit 1F, Danbury, Connecticut, CT 06810, USA
Phone: 1-888-5-WARMUP www.warmup.com